Unleashing UVM™

PACKET PARSER (SINGLE PORT)

Copyright 2013, www.cvcblr.com

REVISION 1.0

- The packet length is fixed to 10, i.e. 10 chunks of 64-bits or 80 bytes.
- This version contains only one input & one output data ports.
- No error signaling mechanism.

Copyright 2013, www.cvcblr.com

BLOCK DIAGRAM:

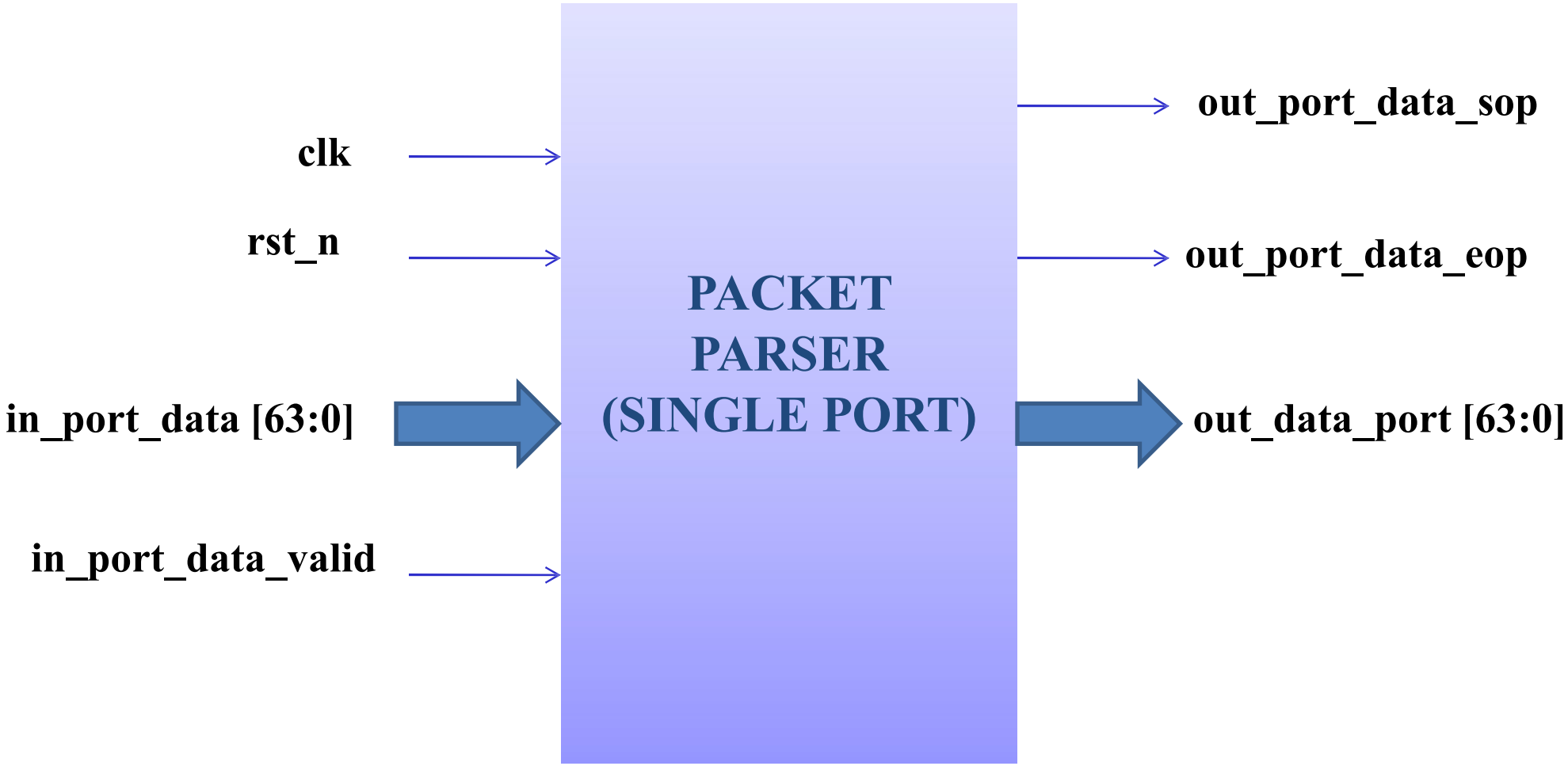

Copyright 2013, www.cvcblr.com

SIGNAL DESCRIPTION:

Signal	Width	Direction	Description
clk	1 bit	Input	Clock input
rst_n	1 bit	Input	Active low reset
in_port_data	64 bits	Input	Data input
in_port_data_valid	1 bit	Input	Validates input data
out_port_data	64 bits	Output	Data output
out_port_data_sop	1 bit	Output	Indicates start of packet for output data
out_port_data_eop	1 bit	Output	Indicates end of packet for output data

Copyright 2013, www.cvcblr.com

DESCRIPTION:

- The Packet Parser receives input packets from "in_port_data" in the form of 64 bits chunks, stores them in internal register until the complete packet has been received and then sends the packets to "out_port_data" again as 64 bits chunks.

- The "rst_n" signal is active low and asynchronous. When it is asserted, "out_port_data_sop", "out_port_data_eop" and "out_port_data" are zero.

- The packet length is 10 (i.e. ten 64-bits chunks per packet).

- The signal "in_port_data_valid" is active high and its de-assertion represents that one complete packet has been received through the "in_port_data".

- When "in_port_data_valid" is de-asserted, at the next positive edge of clock, "out_port_data_sop" is asserted for one clock cycle in which the first 64 bits chunk of the packet, that was received through the "in_port_data", is sent to the "out_port_data".

Copyright 2013, www.cvcblr.com

DESCRIPTION (CONTD..):

- After the sop cycle, the rest of the chunks of the packet are sent to “out_port_data”.

- The signal “out_port_data_eop” is asserted for one clock cycle in which the last chunk of the packet is sent to the “out_port_data”.

- The “out_port_data” holds zero if no input packet is received.

- The “in_port_data_valid” signal should not be asserted again until all the chunks of the previous packet have been sent to the output port i.e. “out_port_data”.

Copyright 2013, www.cvcblr.com

MICRO ARCHITECTURE DESCRIPTION:

- A FIFO register is required to hold the input packet chunks (64-bits each).
- Depth of FIFO is 16.
- When "in_port_data_valid" signal is asserted , then for ten subsequent clock cycles, the input packet chunks will be pushed in the FIFO register. The "in_port_data_valid" signal will be connected to the push input of FIFO register.
- The "in_port_data" signal will be connected to the data input of FIFO register.
- When all the ten chunks of a packet have been pushed into the FIFO register, then from the next positive edge of clock, these packet chunks will be popped out from FIFO and will be routed to the "out_port_data" signal.
- The output "data_out" from FIFO will be zero when "rst_n" is low or when push operation is being performed.

Copyright 2013, www.cvcblr.com

MICRO ARCHITECTURE DESCRIPTION:

- An edge marker block, along with some glue logic, is used to help generate the "out_port_data_sop" and "out_port_data_eop" signals.
- The pop input of FIFO is also generated by the glue logic block, as shown in the detailed block diagram.

FUTURE ASPECT:

- A Packet Parser with four I/O ports.

Copyright 2013, www.cvcblr.com

Unleashing UVM™

DETAILED BLOCK DIAGRAM:

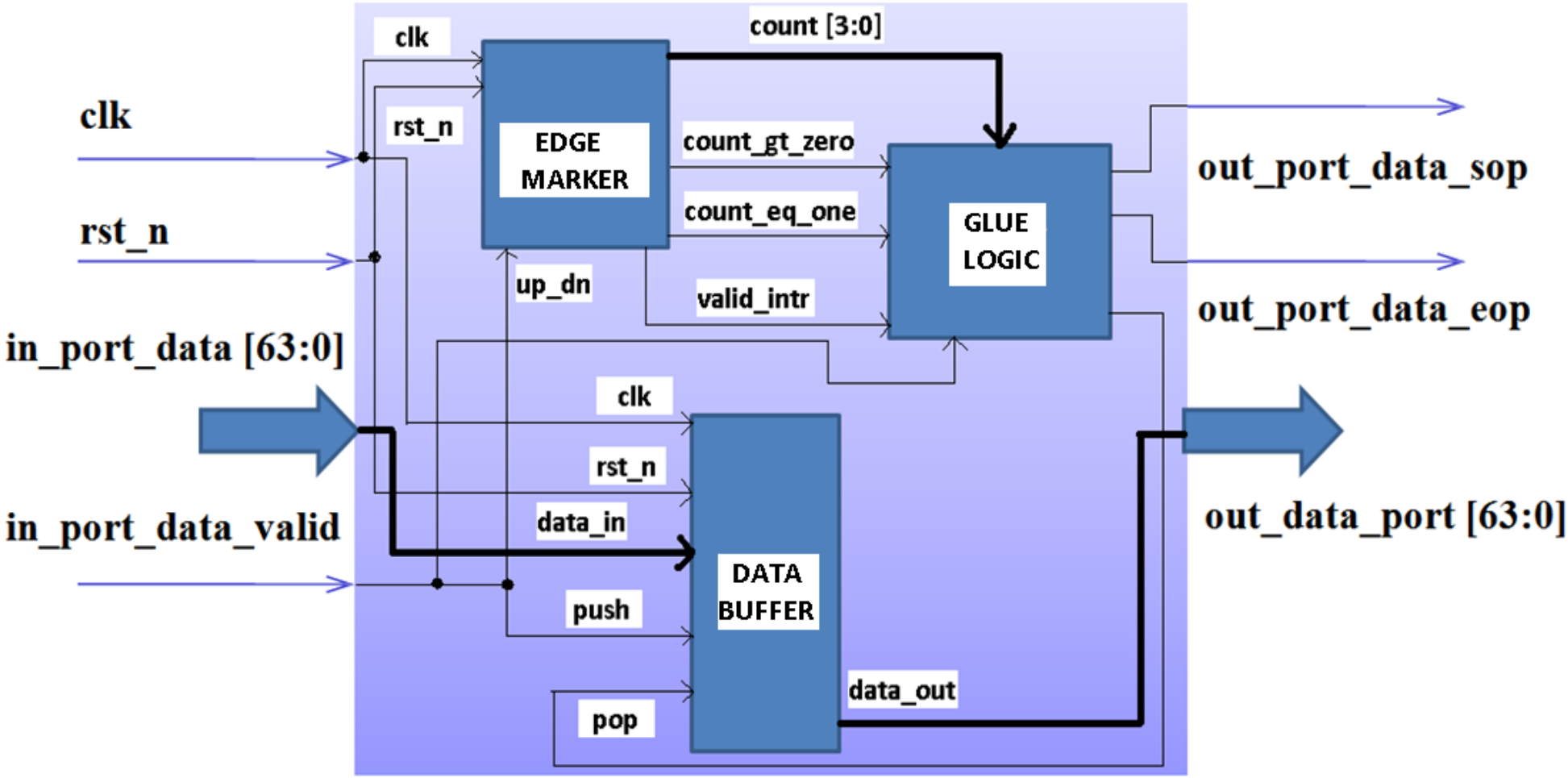

Copyright 2013, www.cvcblr.com

TIMING DIAGRAM:

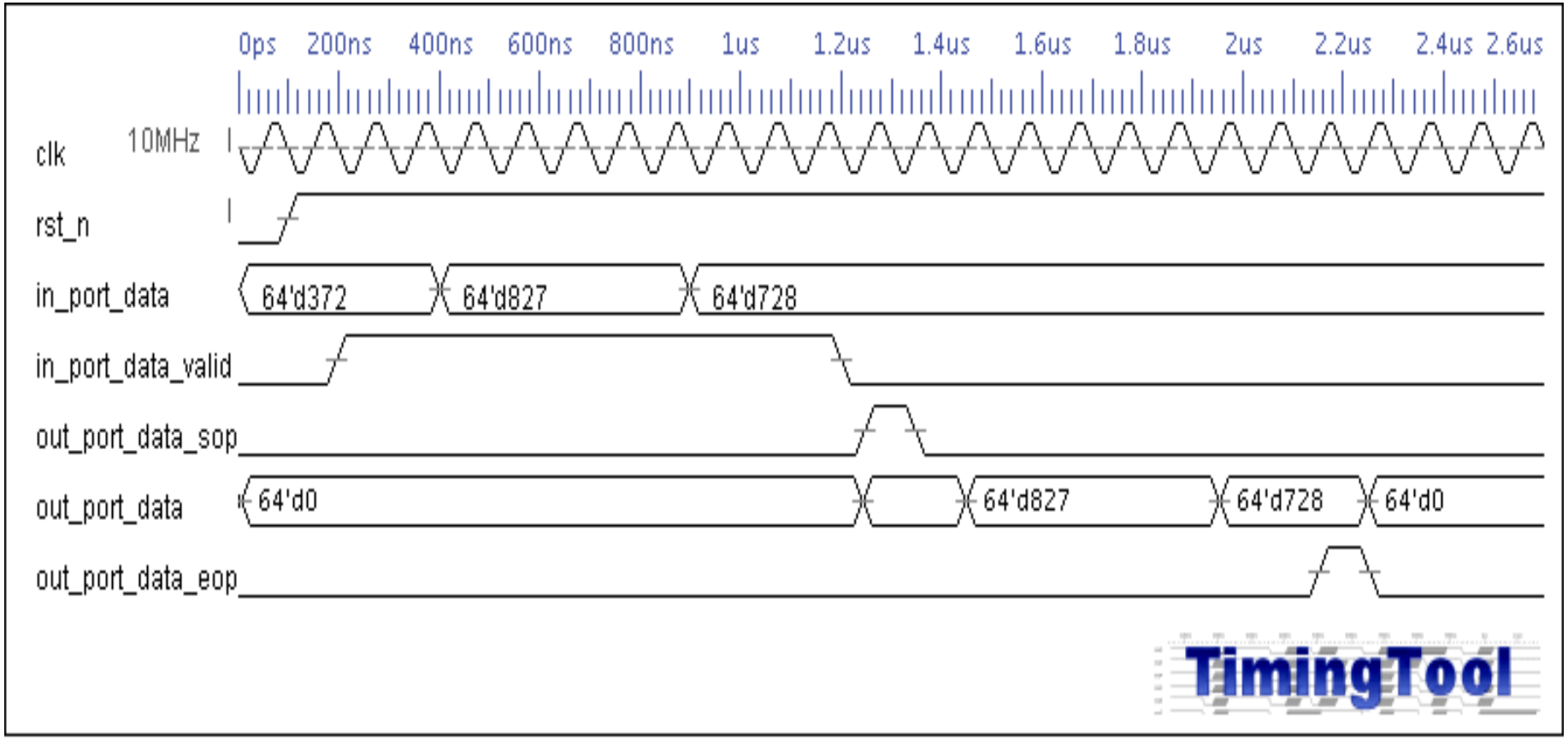

Copyright 2013, www.cvcblr.com